STORM
TECHNICAL SERVICES FOR
EVENTS, THEATRE, MUSIC, FILM & TV
01483 757 211
HIRE@STORMLTD.CO.UK
WWW.STORMLTD.CO.UK

MAC 300

user manual

table of
CONTENTS

Introduction 3

Lamp Installation 5

AC Power Connection 6

Data Connection 7

Rigging 8

Fixture Settings 9

Operation 15

Basic Service 17

Troubleshooting 21

DMX Protocol 22

Error Messages 24

PCB Layout 25

Accessories 26

Specifications 27

©1999 - 2000 Martin Professional A/S, Denmark.

All rights reserved. No part of this manual may be reproduced, in any form or by any means, without permission in writing from Martin Professional A/S, Denmark.

Printed in Denmark.

P/N 35000075, Rev. C.

section 1

INTRODUCTION

Thank you for selecting the Martin MAC 300. The MAC 300 is an automated yoke-mounted Fresnel washlight employing a 250 watt discharge lamp. It provides cyan, magenta, and yellow (CMY) color mixing, separate color wheel with 6 replaceable dichroic filters, variable frost, strobe effects, full-range dimming, and accurate 16-bit movement. Efficient optics, attractive design, modular construction and numerous other features make the MAC 300 well suited for any lighting application calling for color mixing and soft focus in a 250 watt fixture.

MAC 300 safety information

WARNING!

This product is for professional use only. It is not for household use.

This product presents risks of lethal or severe injury due to fire and heat, electric shock, ultraviolet radiation, lamp explosion, and falls. **Read this manual** before powering or installing the fixture, follow the safety precautions listed below and observe all warnings in this manual and printed on the fixture. If you have questions about how to operate the fixture safely, please contact your Martin dealer or call the Martin 24-hour service hotline at +45 70 200 201.

To protect yourself and others from electric shock

- Disconnect the fixture from AC power before removing or installing the lamp, fuses, or any part, and when not in use.
- Always ground (earth) the fixture electrically.
- Use only a source of AC power that complies with local building and electrical codes and has both overload and ground-fault protection.
- Do not expose the fixture to rain or moisture.
- Refer any service operation not described in this manual to a qualified technician.

To protect yourself and others from UV radiation and lamp explosion

- Never operate the fixture with missing or damaged lenses and/or covers.
- When replacing the lamp, allow the fixture to cool for at least 5 minutes before opening the fixture or removing the lamp. Protect your hands and eyes with gloves and safety glasses.
- Do not stare directly into the light. Never look at an exposed lamp while it is lit.
- Replace the lamp if it becomes defective or worn out, or before usage exceeds 125 percent of the rated average life.

To protect yourself and others from burns and fire

- Never attempt to bypass the thermostatic switch or fuses. Always replace defective fuses with ones of the specified type and rating.
- Keep all combustible materials (for example fabric, wood, paper) at least 0.4 meters (16 inches) away from the fixture. Keep flammable materials well away from the fixture.
- Do not illuminate surfaces within 0.4 meters (16 inches) of the fixture.
- Provide a minimum clearance of 0.1 meters (4 inches) around fans and air vents.
- Never place filters or other materials over the lens.
- The exterior of the fixture can reach temperatures up to 150° C (302° F). Allow the fixture to cool for at least 5 minutes before handling.
- Do not modify the fixture or install other than genuine Martin parts.
- Do not operate the fixture if the ambient temperature (Ta) exceeds 40° C (104° F).

To protect yourself and others from injury due to falls

- When suspending the fixture above ground level, verify that the structure can hold at least 10 times the weight of all installed devices.
- Verify that all external covers and rigging hardware are securely fastened and use an approved means of secondary attachment such as a safety cable.
- Block access below the work area whenever installing or removing the fixture.

Unpacking

The MAC 300 comes with:

- 1 1/4-turn clamp mounting bracket
- 1 5-meter, 3-pin shielded XLR control cable
- 1 3-meter, 3-wire IEC power cable
- 1 user manual

The packing material is carefully designed to protect the fixture during shipment - always use it or a custom flight case to transport the fixture.

Main dimensions

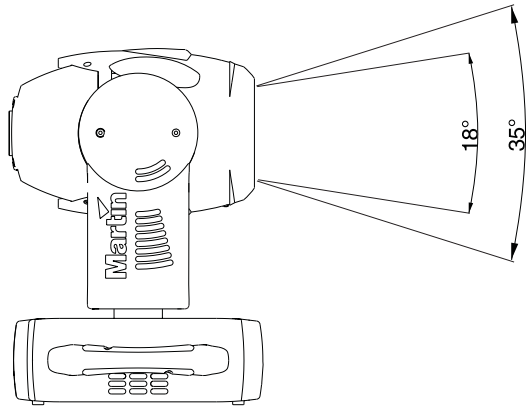

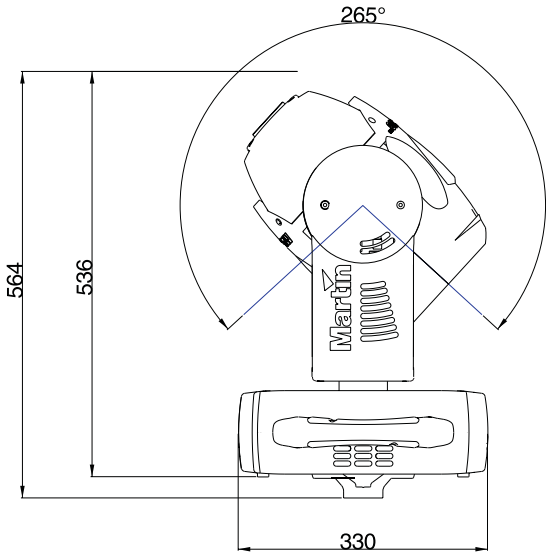

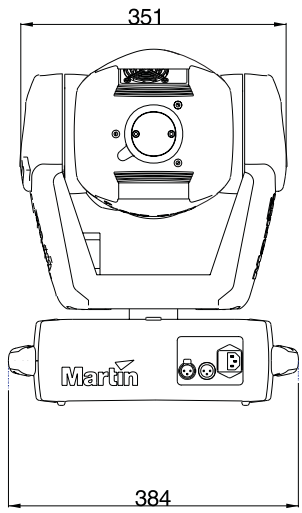

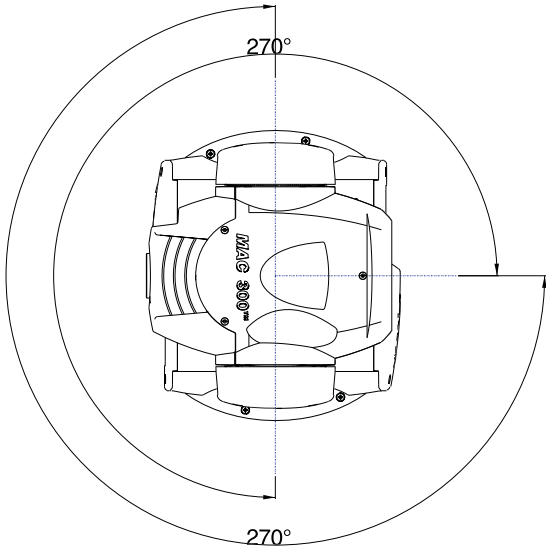

section 2

LAMP INSTALLATION

This section describes how to install a lamp.

Compatible lamps

The lamps listed in the table below may be used with the MAC 300. *Installing any other lamp may damage the fixture*.

Lamp	Replace before	Average life	Color Temp.	Output	P/N
Osram HSD 250	2500 hr.	2000 hr.	6000K	68 lm/W	97010103
Philips MSD 250/2	2200 hr.	2000 hr.	6500K	72 lm/W	97010100
Philips MSD 200	2200 hr.	2000 hr.	5600K	67 lm/W	97010106

Installing or changing the lamp

WARNING!

Always disconnect the fixture from AC power and allow it to cool before installing the lamp. To protect against lamp explosion, allow a hot lamp to cool for at least 5 minutes before removing the lamp socket.

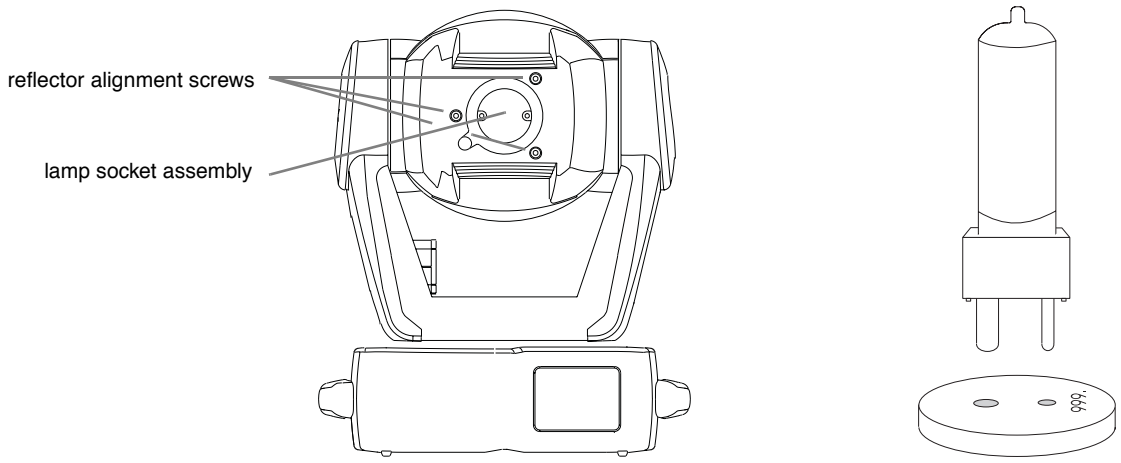

Figure 1: Lamp installation

1. Remove the 2 Phillips screws from the lamp socket assembly. Pull the lamp and socket out of the head.
2. Remove the old lamp, if any, from the socket.
3. **Holding the new lamp by its ceramic base** (do not touch the glass), align the small pin with the small hole and insert the lamp squarely into the socket. Make sure that the 4 small projections on the base contact the face of the socket.
4. Clean the glass bulb with the cloth supplied with the lamp, particularly if your fingers touched the glass. A clean, lint-free cloth wetted with alcohol may also be used.
5. Gently insert the assembly, making sure the lamp fits through the opening in the reflector. Replace the 2 screws.
6. Please see “Optimizing reflector alignment” on page 19 to optimize light output.

section 3

AC POWER CONNECTION

This section describes how to tap the power supply for local conditions and how to wire the mains lead. Do not connect the MAC 300 to an electrical dimmer system: doing so can damage the electronics.

WARNING!

For protection from dangerous electric shock, the fixture must be grounded (earthed). The AC supply shall have overload and ground-fault protection.

Changing voltage and frequency settings

The factory settings are printed on the serial number label under the base. *These settings must match the local AC power supply as closely as possible!* Operating at the incorrect power setting can result in poor light output, greatly reduced lamp life, overheating and/or damage to the fixture.

1. Disconnect the fixture from AC power. Unscrew and remove the cover from top of the base on the side closest to the power inlet.
2. Locate the 7-terminal connection block. Move the wires to the terminals that most closely match local conditions as shown in Table 1. If the local voltage falls halfway between settings, use the higher voltage setting. For example, use the 120 V setting if your voltage is 110 V.
3. Replace the cover.

	100 V	120 V	210 V	230 V	250 V
50 Hz	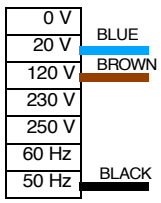	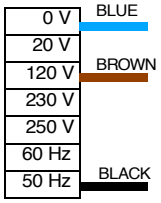	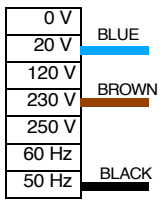	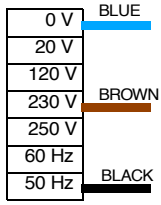	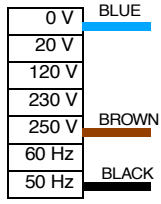
60 Hz	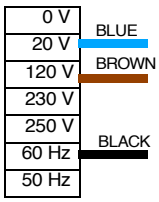	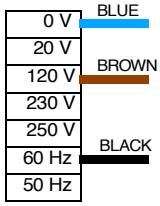	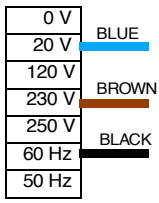	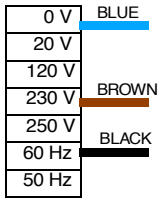	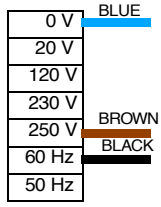

Table 1: Voltage and frequency settings

Wiring the mains lead

Wire	Pin	Marking	Screw (US)
brown	live	“L”	yellow or brass
blue	neutral	“N”	silver
yellow/green	ground	⏚	green

Table 2: Cord cap wiring

1. Install a grounding-type cord cap on the mains lead. Connect the yellow/green wire to ground (earth), the brown wire to live (hot), and the blue wire to neutral. Table 2 shows some possible pin identification schemes; if you have any doubts about proper installation, consult a qualified electrician.
2. Verify that the feed cable is undamaged and rated for the current requirements of all connected devices.

section 4

DATA CONNECTION

This section describes how to connect fixtures to a controller. The MAC 300's 3-pin XLR connectors are configured for use with DMX-512 controllers. To reconfigure them for use with Martin Protocol controllers, see "Changing the XLR pin-out" on page 19.

XLR PIN-OUT

Pin 1: shield Pin 2: signal - Pin 3: signal +

Recommended cable

Use cable designed for RS-485 devices with low capacitance and a characteristic impedance of 85 to 150 ohms. The cable must be electrically shielded and have at least 1 pair of twisted wires. The minimum wire size is 0.2 mm^2 (24 AWG) for runs up to 300 meters (1000 ft.), and 0.322 mm^2 (26 AWG) for runs up 500 meters (1640 ft.).

Adaptors

As many devices have 5-pin connectors and others have 3-pin connectors with reversed signal polarity, adaptor cables as shown below may be required. Insert a termination plug in the output of the last fixture on the link.

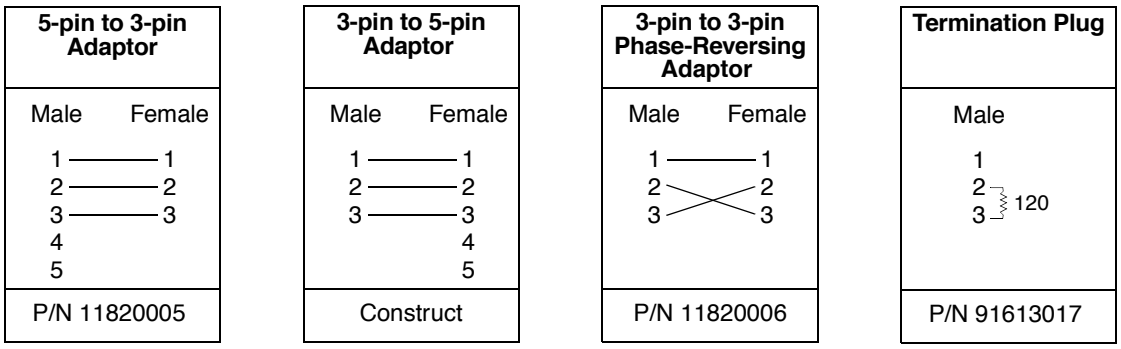

Figure 2: Cable adaptors and termination

Building the data link

1. **DMX controllers:** Connect a data cable to the controller's data output. If controller has a 5-pin female socket, use a 5-pin male to 3-pin female adaptor cable (P/N 11820005).

   Martin RS-485 protocol controllers: First, connect a 3-pin "swapper" cable (P/N 11820006) to the controller's data output; then, connect a regular data cable to the swapper cable. Alternatively, reconfigure the XLR pin-out as described on page 19.

2. If convenient, you may split the link into branches using a splitter such as the Martin 4-Channel Opto-Isolated RS-485 Splitter/Amplifier. Do not use a "Y" connector to split the link.

3. Lead the data cable from the controller to the first fixture. Plug the cable into the fixture's data input socket.

4. Connect the output of the fixture closest to the controller to the input of the next fixture. If connecting to another type of fixture with reversed-polarity (pin 3 cold), insert a swapper cable between the two fixtures.

5. Continue connecting fixtures output to input. Up to 32 devices may be connected on a serial link. If more fixtures are required, use another controller output, if available, or an RS-485 amplifier.

6. *Terminate the link* by inserting a male termination plug (P/N 91613017) into the data output of the last fixture. A termination plug is simply an XLR connector with a 120 ohm, 0.25 W resistor soldered across pins 2 and 3. If a splitter is used, each branch of the link must be terminated.

section 5

RIGGING

This section briefly describes how to install the MAC 300 on a truss.

Location and orientation

The MAC 300 may be installed in any orientation. It shall be located at least 0.4 meters (16 inches) away from the surface to be illuminated and any combustible materials. The lamp socket at the back of the head reaches temperatures up to 150° C (302° F): the fixture should not be located in publicly trafficked areas.

Rigging hardware

The MAC 300 includes a clamp mounting bracket to which 1 or 2 rigging clamps (not included) can be bolted with locking 12 mm (1/2 in.) hardware. The clamp bracket fastens to the base with 1/4-turn fasteners. For clamps available from Martin, see the list of accessories on page 26.

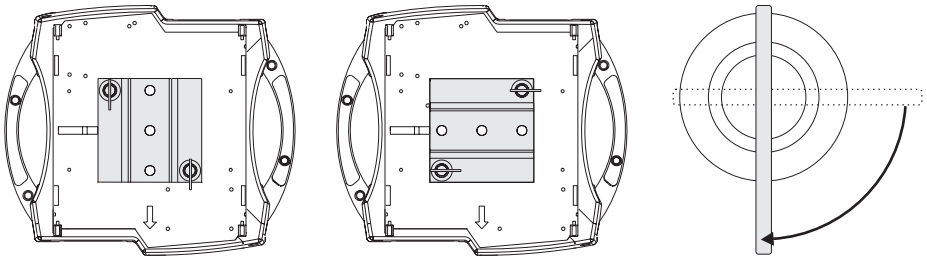

Figure 3: Clamp mounting bracket

To hang the fixture on a truss

WARNING!

Block access below the work area before proceeding.
Always fasten a safety cable to the reinforced attachment point in the base.
The 1/4-turn fasteners are locked only when turned fully clockwise.

1. Verify that the clamps are in good condition and can bear at least 10 times the weight of the fixture. Bolt clamps to the bracket with a grade 8.8 (minimum) M12 bolt and lock nut, or as recommended by the clamp manufacturer, through the 13 mm holes in the clamp mounting bracket.
2. Align the clamp mounting bracket with any 2 key slots on the base. Insert both locking pins into the slots and turn both levers a full 1/4 turn clockwise to lock.
3. Verify that the structure can bear at least 10 times the weight of all installed fixtures, clamps, cables, auxiliary equipment, etc.
4. Working from a stable platform, clamp the fixture to the structure.
5. Install a safety cable that can bear at least 10 times the weight of the fixture securely to the structure and anchor the cable to the dedicated attachment point in the base. The attachment point is designed to fit a carabiner clamp.

section 6

FIXTURE SETTINGS

This section describes how to set the address and personalities, read lamp hours, DMX values, and other information; calibrate effects, control the fixture manually, and run test and demo programs from the 4-digit LED control panel.

Functions that do not require feedback can also be performed remotely via the serial link using the MPBB1 Uploader. Please refer to the MPBB1 manual.

Menu navigation

The DMX or Martin address, depending on the mode, and any error messages are displayed after the MAC 300 resets. To enter the menu, press [MENU]. Use the [↑] and [↓] keys to move within the menu. To select a function or submenu, press [Enter]. To escape, press [MENU].

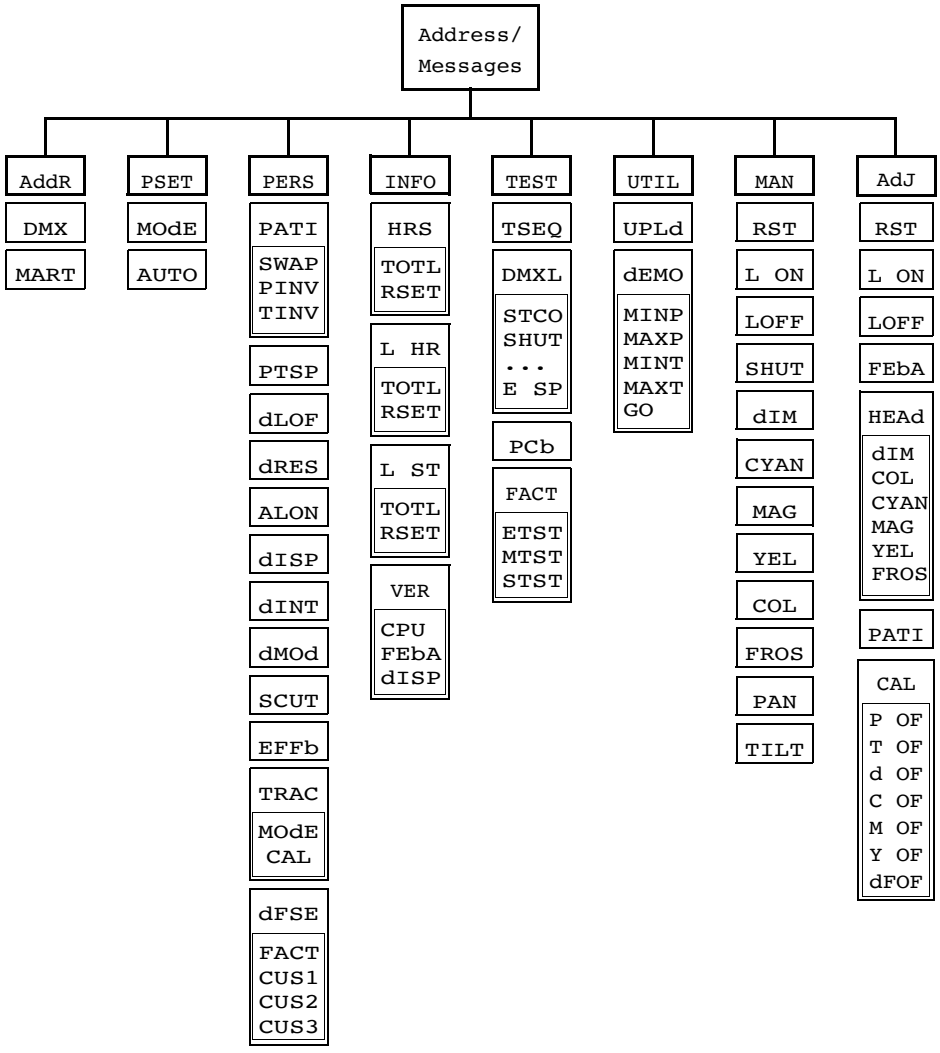

Figure 4: MAC 300 menu

Personality settings

The MAC 300's personality settings are shown in Table 3; they are described as well in the following section. To select a personality setting:

1. Press [Menu] as required to reach the main menu. Navigate to PERS and press [Enter].
2. Navigate to the desired setting and press [Enter].
3. Select the desired option with the arrow keys and press [Enter].

Personality	Path	Options	**Effect** (Default setting shaded, * indicates DMX override)
Pan/tilt swap	PATI/SWAP	ON	Map DMX pan control to tilt channel and vice versa.
		OFF	**Normal pan and tilt control.**
Pan inverse	PATI/PINV	ON	Reverse DMX pan control (right → left).
		OFF	**Normal pan control (left → right).**
Tilt inverse	PATI/TINV	ON	Reverse DMX tilt control (down → up).
		OFF	**Normal tilt control (up → down).**
Pan/tilt speed	PTSP	**FAST**	**Optimize movement for speed.***
		SLOW	Optimize movement for smoothness.*
DMX lamp off	dLOF	ON	Enable DMX lamp off command.
		OFF	**Disable DMX lamp off command.***
DMX reset	dRES	**ON**	**Enable DMX reset command.**
		OFF	Disable DMX reset command.*
Automatic lamp on	ALON	ON	Lamp strikes automatically within 90 seconds of power on.
		OFF	**Lamp remains off until "lamp on" command is sent.**
Display on/off	dISP	**ON**	**Display stays on.**
		OFF	Display goes out 2 minutes after last key press.
Display intensity	dINT	10–100	Adjust display intensity.
Dimmer mode	dMOd	**NORM**	**Normal dimming.**
		TUNG	Simulated tungsten dimming.
Shortcuts	SCUT	**ON**	**Color and CMY wheels turn the shortest direction.***
		OFF	Wheels turn same direction.*
Effects feedback	EFFb	**ON**	**Enable feedback on color and CMY wheels.**
		OFF	Disable feedback on color and CMY wheels.
Tracking algorithm	TRAC/MOdE	**MOd1**	**Absolute delta value algorithm (for most controllers)**
		MOd2	Real delta value algorithm
Tracking samples	TRAC/CAL	1–10	Tracking samples. Increase if pan/tilt is not smooth.

Table 3: Personality settings

Custom personality configurations

Three sets of custom personality configurations can be stored for later recall. To create and use a custom configuration:

1. Set the personalities as desired.
2. Navigate to PERS / dFSE and press [Enter].
3. Select CUS1, CUS2, or CUS3 and press [Enter].
4. Select SAVE to create a custom configuration or LOAd to recall. Press [Enter].
5. To load the factory default personality settings, navigate to PERS / dFSE / FACT and press [Enter].

Adjusting the LED display

Invert

To flip the display vertically, press the up-arrow [↑] and down-arrow [↓] keys simultaneously.

Adjust intensity

To adjust the display intensity, set `PERS/dINT` to a level between 10 and 100.

Blackout

To blackout the display 2 minutes after the last key-press, toggle `PERS/dISP` to `OFF`.

Protocol selection

The MAC 300 can be controlled with DMX-512 and Martin RS-485 protocol controllers. When used with DMX controllers, there are 4 control protocols to choose from. The control option - DMX mode 1, 2, 3, 4; or Martin - must match the controller setup.

DMX mode summary

1	2	3	4	5	6	7	8	9
shutter	dimmer	cyan	magenta	yellow	color wh.	frost	pan coarse	tilt coarse

Mode 1
tracking control
8-bit pan/tilt
9 channels

1	2	3	4	5	6	7	8	9	10	11
shutter	dimmer	cyan	magenta	yellow	color wh.	frost	pan coarse	pan fine	tilt coarse	tilt fine

Mode 2
tracking control
16-bit pan/tilt
11 channels

1	2	3	4	5	6	7	8	9	10	11
shutter	dimmer	cyan	magenta	yellow	color wh.	frost	pan coarse	tilt coarse	p/t speed	fx speed

Mode 3
tracking & vector control
8-bit pan/tilt
11 channels

1	2	3	4	5	6	7	8	9	10	11	12	13
shutter	dimmer	cyan	magenta	yellow	color wh.	frost	pan coarse	pan fine	tilt coarse	tilt fine	p/t speed	fx speed

Mode 4
tracking & vector control
16-bit pan/tilt
13 channels

The DMX modes are summarized above. Mode 4 provides full control; it is recommended unless channels are limited.

To select a protocol

Press		To
[Menu]	As required	Display main menu
[↑], [↓]	As required	Select `PSET`
[Enter]	Once	Display sub menu
[↑], [↓]	As required	Select `MOdE`
[Enter]	Once	Display currently selected control mode
[↑], [↓]	As required	Select protocol (`dMX1`, `dMX2`, `dMX3`, `dMX4`, `MART`)
[Enter]	Once	Save setting. `MOdE` is displayed.
[Menu]	Once	Display main menu
[Menu]	Once	Display current address

Table 4: Setting a protocol

Automatic protocol detection

Automatic protocol detection allows the MAC 300 to detect the controller type - DMX-512 or Martin RS485 - and respond accordingly. If it is a DMX controller, the MAC 300 uses the control option selected above.

The default setting is `OFF`. To turn it on, navigate to the `PSET` sub menu, select `AUTO`, press [Enter], select `ON`, and press [Enter].

Address selection

The address, also known as the start channel, is the first channel used to receive instructions from the controller. The address set on the fixture must match the address set on the controller.

When selecting DMX addresses, *be sure to allow the number of channels required for the protocol*. If any of the control channels for one fixture overlap any of the channels for another fixture, then one of the fixtures will receive the wrong instructions and respond incorrectly. Two MAC 300s may share the same address, however, if they are to respond identically: they will receive the same instructions so individual control will be impossible.

Note: Whether the MAC 300 displays a DMX or Martin address at the top of the menu depends on the protocol selected.

To set a DMX address

Press		To
[Menu]	As required	Display main menu
[↑]	As required	Select `AddR`
[Enter]	Once	Display address sub menu
[↑]	As required	Select `DMX`
[Enter]	Once	Display current DMX address
[↑], [↓]	As required	Select desired DMX address
[Enter]	Once	Save the new address. `DMX` is displayed.
[Menu]	Once	Display main menu
[Menu]	Once	Display current address for the `PSET` setting.

Table 5: Selecting a DMX address

To set a Martin address

The MAC 300 uses 2 Martin RS-485 channels.

Press		To
[Menu]	As required	Display main menu
[↑]	As required	Select `AddR`
[Enter]	Once	Display address sub menu
[↑]	As required	Select `MART`
[Enter]	Once	Display current Martin address
[↑], [↓]	As required	Select desired Martin address
[Enter]	Once	Save the new address. `MART` is displayed.
[Menu]	Once	Display main menu
[Menu]	Once	Display current address for the `PSET` setting.

Table 6: Selecting a Martin address

Readouts

The MAC 300 has counters to track usage, maintenance intervals, lamp life, etc. One set of counters shows total (TOTL) accumulated usage and cannot be reset. Another set shows usage since the counter was reset (RSET). To reset one of these counters, navigate to the readout and press [↑] for 5 seconds.

Hours used

To read the accumulated total number of hours the fixture has been on, navigate to INFO / HRS / TOTL and press [Enter]. To read the number of hours since the counter was last reset, navigate to INFO / HRS / RSET and press [Enter]. To reset this counter, navigate to the readout and press [↑] for 5 seconds.

Lamp hours

To read the accumulated total number of lamp hours, navigate to INFO / L HR / TOTL and press [Enter]. To read the number of lamp hours since the counter was last reset, navigate to INFO / L HR / RSET and press [Enter]. To reset this counter when installing a new lamp, navigate to the readout and press [↑] for 5 seconds.

Lamp strikes

To read the accumulated total number of lamp strikes, navigate to INFO / L ST / TOTL and press [Enter]. To read the number of lamp strikes since the counter was last reset, navigate to INFO / L ST / RSET and press [Enter]. To reset this counter when installing a new lamp, navigate to the readout and press [↑] for 5 seconds.

Software version

Navigate to the sub menu under INFO / VER to read the version number of the CPU software (CPU), feedback circuit software (FEBA), and display module software (dISP).

Utilities

Upload mode

The software upload mode is engaged automatically by the MPBB1 Uploader. Engage upload mode manually only if automatic upload fails. To do so, navigate to UTIL / UPLd and press [Enter]. Press [Enter] again when SURE is displayed to confirm, or press [Menu] to escape. See also “Updating software” on page 19.

Demonstration program

The demonstration menu allows you to run a preprogrammed stand-alone program. Before running the demo, set the minimum and maximum pan and tilt positions (MINP, MAXP, MINT, MAXT) to a good location for viewing the effects. Select GO and press [Enter] to run the demo. Press [Menu] to stop the program.

Test programs

Test sequence

Navigate to TEST / TSEQ and press [Enter] when RUN is displayed to perform a general fixture test. Press [Menu] to stop the program.

DMX log

The DMX log provides a quick way to check if the fixture is receiving DMX instructions correctly. The log displays the start code (STCO), which must be 0, and the DMX values received on each control channel.

To read a value, navigate to TEST / DMXL and press [Enter]. Scroll to an effect channel and press [Enter] to read the DMX value received. Look up the value’s function in the DMX protocol to see if it corresponds to the effect’s behavior.

Quality control and service tests

The PCB and FACT menus, under TEST, contain tests for factory and service use. The factory effects test (TEST / FACT / ETST) drives all effects at 10 percent over their maximum speed.

Manual control

The manual control menu (MAN) permits limited operation from the control panel.

- To reset the fixture, select RST.
- To turn the lamp on or off, select L ON or LoFF.
- To open, close, and strobe the shutter at 3 speeds, select SHUT.
- To control the dimmer, select dIM.
- To move the color wheel to each position and scroll it at 3 speeds, select COL.
- To control the CMY mix, select CYAN, MAG, and YEL.
- To insert the frost filter, select FROS.
- To control pan and tilt, select PAN and TILT.

Adjustment control and calibration

The adjustment menu (AdJ) provides the following functions:

- Reset the fixture (RST)
- Turn on and off the lamp (L ON, LoFF)
- Disable pan/tilt feedback (FEbA)
- Control effects in the head (HEAd)
- Move the head to the home and extreme positions (PATI)
- Calibrate effects (CAL)

Head effects adjustment

The head submenu (AdJ / HEAd) provides manual control when making mechanical adjustments, which must be performed by a qualified technician. It allows the technician to:

- Open, close, and strobe the dimmer/shutter
- Move the color wheel to the open, sensor, and full color positions
- Move the CMY wheels to the open, sensor, and full positions
- Insert and remove the frost filter

Calibration

The calibration submenu (AdJ / CAL) allows you to adjust the effects for uniformity between fixtures: it is not a substitute for mechanical adjustment. To reset all calibrations to their factory defaults, select dFOF and press [Enter] when SURE is displayed, or press [MENU] to escape.

1. Select the effect to calibrate: pan (P OF), tilt (T OF), dimmer/shutter (d OF), cyan (CYOF), magenta (MAOF), or yellow (YEOF).
2. Calibrate the effect using the arrow keys until it matches the other units. Offsets are adjustable from 1 to 255.
3. Press [Enter] to save the calibration.

section 7

OPERATION

This section describes the MAC 300's controllable effects and how personality settings affect their behavior. Selecting personalities from the control panel is described in the previous section.

Martin RS-485 control

The MAC 300 will be controllable with the Martin 3032 controller when version 2.07 of the 3032 software is released. To respond to the controller, either Martin mode must be selected or automatic protocol detection must be enabled.

DMX-512 control

The MAC 300 may be operated with USITT DMX512 controllers in 4 different modes that mix vector and/or tracking control with 8-bit or 16-bit pan/tilt resolution in different combinations.

Tracking versus vector control

With tracking control the time it takes an effect to move from one position to another is controlled by programming a fade *time* on the controller. The controller divides the move into steps and updates the fixture with small changes at the rate required to achieve the fade. The MAC 300 follows or "tracks" the changes, and averages them with a digital filter algorithm to ensure smooth movement at all speeds.

With vector control you set the fade *speed* on a separate speed channel. This provides a way to fade effects with controllers that do not have programmable fade times. With controllers that send slow or irregular tracking updates, vector control provides smoother movement, particularly at slow speeds.

Tracking control can be enabled in vector mode by setting one or both of the speed channels to "tracking speed." When setting a fade *speed*, though, the controller fade *time* must be 0, i.e., the position snaps from one value to the next.

Vector control also provides a special "blackout speed" and overrides of the shortcut and pan/tilt speed personality settings.

8-bit versus 16-bit pan/tilt resolution

With 8-bit pan/tilt resolution, pan and tilt are divided into 256 equal increments. Finer position control and smoother movement is provided in the 16-bit modes, which divide pan into 40,192 positions and tilt into 39,424 positions.

Controllable effects

All mechanical effects are reset to a home position when the fixture is powered up and they can also be reset from the controller. The DMX Reset function (`PERS/dRES`), when set to off, prevents accidental resets by adding the requirement that each CMY channel be set to a DMX value from 230 to 232.

An on-the-fly position correction system automatically corrects the position of the CMY wheels and the color wheel. Though this feature can be disabled by turning Effects Feedback (`PERS/EFFb`) off, doing so is not recommended.

Lamp

With the default setting, the lamp remains off until a "lamp on" command is sent from the controller. Note: A peak of electric current that can be many times the operating current is drawn for an instant when striking a discharge lamp. Striking many lamps at once may cause a voltage drop large enough to prevent lamps from striking or draw enough current to trip circuit breakers. If sending "lamp on" commands to multiple fixtures, program a sequence that strikes lamps one at a time at 5 second intervals.

The MAC 300 automatically strikes the lamp within 90 seconds of being powered on only if the Automatic Lamp On setting (`PERS/ALON`) is turned on. A delay determined by the fixture address staggers lamp strikes to prevent excessive current draw.

The lamp can be turned off from the controller. Note: the lamp cannot be restruck for 8 minutes after being turned off. Accidental "lamp off" commands can be prevented by turning the DMX Lamp Off setting (`PERS/dLOF`) off.

Dimmer / shutter

The mechanical dimmer/shutter system provides full, high-resolution dimming, and random or variable strobe effects up to 14 Hz.

The Dimmer Mode (PERS / dMOd) setting allows you to select between linear or simulated tungsten fade curves. For simulated tungsten dimming, the fade time must be set to 0.

CMY subtractive color mixing

The CMY color mixing system is based on graduated cyan, magenta, and yellow color filters. A continuous range of colors may be achieved by varying the amount of each filter from 0 to 100%. Random CMY color mixing at three speeds can be selected on DMX channel 6.

The Shortcuts setting (PERS / SCUT) determines whether or not the CMY wheels always take the shortest path to the next position; this setting may be overridden on the speed channel in vector mode.

Color

The color wheel provides a 5500 to 2900K color temperature correction (CTC) filter, a UV filter, and 4 saturated dichroic color filters. The filters are replaceable; please see “Changing color filters” on page 18, and additional colors are available from Martin; please see “Accessories” on page 26.

The wheel can be scrolled continuously - allowing for split color effects - or in steps, and rotated continuously in both directions at different speeds.

The Shortcuts setting (PERS / SCUT) determines whether or not the wheel always takes the shortest path to the next position; this setting may be overridden on the speed channel in vector mode. Setting the effects speed to “blackout” causes the shutter to black out the light while the wheel is moving.

Frost

The variable frost filter softens and widens the beam. The beam field angle is 18° with no frost applied and increases to 35° with the frost applied fully.

Pan and tilt

The yoke pans 540° and the head tilts 265°. Movement may be optimized for speed by setting the pan/tilt speed setting (PERS / PTSP) to FAST, or for smoothness by setting it to SLOW. This setting may be overridden on the speed channel in vector mode. Setting the speed to “blackout” causes the shutter to close while the head is moving.

The pan and tilt channels can be inverted and/or swapped in DMX mode with the pan/tilt personality settings (PERS / PATI).

section 8

BASIC SERVICE

The MAC 300 operates under challenging conditions presented by heat, humidity, dust, and touring. *Excessive dust, grease, and smoke fluid buildup degrades performance and causes overheating and damage that is not covered by the warranty.* The fixture requires regular maintenance to keep performing at its peak. The schedule will depend on the application and should be discussed with your Martin distributor. Refer any service that you are not qualified to perform to a professional technician.

W A R N I N G !

Removing covers exposes dangerous live electrical circuits, hot surfaces, and a lamp under high pressure. Procedures requiring the removal of any cover shall be performed by professional users or technicians only. Disconnect the fixture from AC power and allow it to cool before removing any cover.

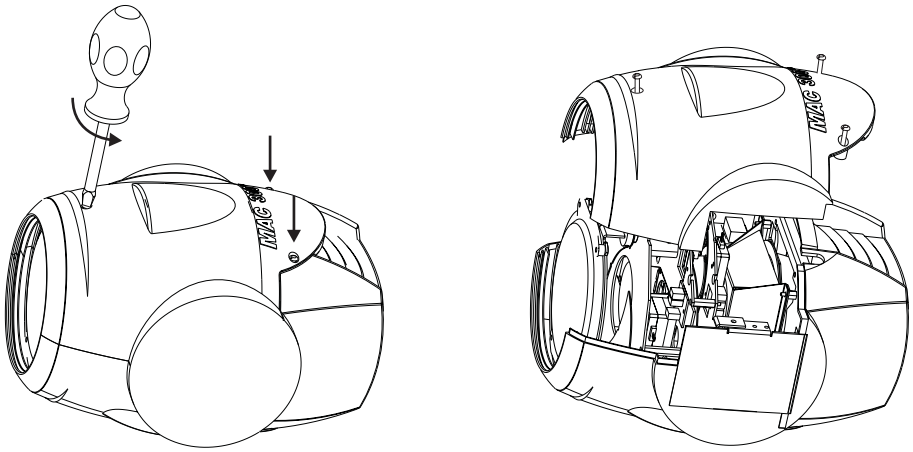

Figure 5: Opening the head (base and yoke not shown)

Cleaning

Optical components

Use care when cleaning optical components. The surface on dichroic filters is achieved by means of special multi-layer coatings and even small scratches may be visible. Residues from cleaning fluids can bake onto components and ruin them.

1. Allow the components to cool completely.
2. Wash dirty lenses and filters with isopropyl alcohol. A generous amount of regular glass cleaner may also be used, but no residues may remain.
3. Rinse with distilled water. Mixing the water with a small amount of wetting agent such as Kodak Photoflo will help prevent streaking and spotting.
4. Dry with a clean, soft and lint-free cloth or blow dry with compressed air.

Fans

To maintain adequate cooling it is important that the fans be cleaned of dust and dirt periodically. Use a soft brush, vacuum, or compressed air.

Changing color filters

Handle color filters by their edges as much as possible and be careful not to chip the edges.

1. Disconnect the fixture from AC power and allow it to cool.
2. Remove the top cover from the head as shown in Figure 5.
3. Rotate the color wheel until the filter is aligned with the access hole in the chassis plate.
4. Gently tilt the filter out of the clips as shown in Figure 6 and remove.
5. Installation is the reverse. Turn the filter so that the coated side faces the lamp.

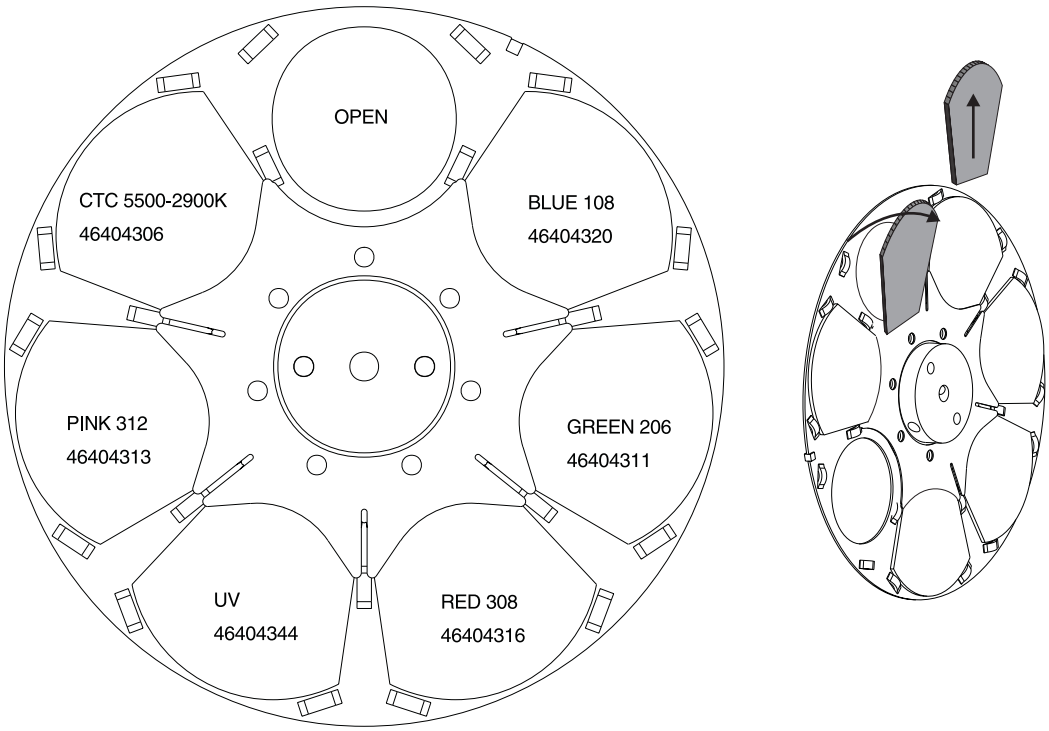

Coated side towards lamp

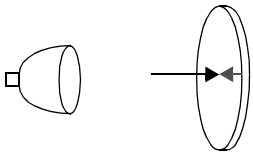

When an object is held up to the coated side there is no space between the object and its reflection. The back edge of the filter cannot be seen when looking through the coated side.

Uncoated side towards stage

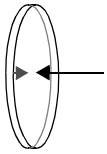

When an object is held up to the uncoated side there is a space between the object and its reflection. The back edge of the filter can be seen when looking through the uncoated side.

Figure 6: Color filter removal and positioning

Replacing fuses

Power supply fuses

The fuses for each of the 3 low-voltage power supplies are located on the printed circuit board. If one of the circuit board LEDs does not light, one of these fuses may be blown.

1. Disconnect the fixture from AC power. Remove the 2 Philips screws from the plastic cover on the arm opposite the side with the visible motor and pull off the cover.
2. Locate and replace the defective fuse with one of the same rating. The fuses are shown on the PCB layout diagram; their values are listed on page 27.
3. Replace the cover before applying power.

Main fuse

The main fuse holder is built in to the mains input socket. *Never replace the fuse with one of a different rating!*

1. Unplug the mains cable from the input socket. Pry open the fuse holder and remove the fuse.
2. Replace the fuse with one of the same type. The fuse rating is listed on serial number label.
3. Close the fuse holder and replace the mains cable.

Changing the XLR pin-out

The signal polarity of the XLR connectors can be reversed, allowing the fixture to be connected directly to those Martin devices with reversed polarity (pin 3 -). Optionally, a phase-reversing cable may be used.

1. Disconnect the fixture from AC power. Remove the 2 Philips screws from the cover on the arm opposite the side with the visible motor and pull off the cover.
2. Position the jumpers on PL 233 and PL 234 for the desired XLR pin-out as shown.
3. Replace the cover before applying power.

Martin pin-out | DMX pin-out (default)

Figure 7: XLR jumpers

Optimizing reflector alignment

The MAC 300 reflector is aligned at the factory. Due to differences between lamps, however, fine adjustment may improve performance.

1. Strike the lamp and shine the light on a flat surface.
2. See Figure 1. Center the hot-spot (the brightest part of the beam) by turning the 3 adjustment screws one at a time with a 3 mm Allen wrench. If there is no hot-spot, adjust the reflector until the light is even.
3. To reduce a hot-spot, “push” the reflector out by turning all 3 screws counterclockwise 1/4-turn at a time until the light is evenly distributed.
4. If the light is brighter around the edge than it is in the center, or if light output is low, the lamp is too far back in the reflector. “Pull” the reflector in by turning the screws clockwise 1/4-turn at a time until the light is bright and evenly distributed.

Updating software

The latest CPU control software for the MAC 300 is available from your Martin dealer and the Martin web site. This software is uploaded to the MAC 300 using the Martin MPBB1 Uploader. The display module and feedback system software are not updated this way.

Normal upload

Update software is uploaded using a Martin uploader such as the MPBB1. The uploader is connected to the fixture just like a controller. Under normal conditions, software can be installed from a remote location - there is no need to set the MAC 300 to boot mode. Please refer to the uploader manual for further instructions.

Boot mode upload

If the data is corrupted during transmission, a check-sum error (`CSER`) occurs and after 15 seconds the fixture switches to boot mode (`UPLd`) and is ready for a boot mode upload as described in the uploader manual.

If a software upload is interrupted, the fixture must be turned off for at least 10 seconds before a new upload can be attempted. When powered on, a check-sum error occurs and the fixture goes into boot mode, ready for a second upload attempt. Select boot mode upload on the uploader.

If there is no functional software in memory, the fixture must be set to boot mode manually. If the control panel works, select `UPLd` from the `UTIL` menu and confirm when `SURE` is displayed by pressing [ENTER].

If the control panel does not work, boot mode can be engaged by moving jumper PL121 on the main circuit board to pins 1 and 2 as follows.

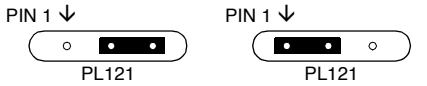

normal setting hard boot setting

Figure 8: Hard boot jumper

1. Disconnect the fixture from AC power. Remove the plastic cover from the arm opposite the side with the visible motor.
2. Move jumper PL121 to pins 1 and 2 (hard boot setting). See also the diagram on page 25.
3. Perform a boot-mode upload as described in the uploader manual.
4. Disconnect the fixture from AC power. Move the hard boot jumper back to the normal setting and replace the cover.

Changing lenses

A wide angle diffusion “lens” is available for the MAC 300. The diffuser gives the MAC 300 a 59° beam angle. If the frost filter is fully applied, the beam angle is 67°. Photometric data for this option is available at http://www.martin.dk/service/Photometrics/MAC300-wide.htm.

The kit may be ordered by P/N 91610016, “Wide angle diffuser lens kit for MAC 300." To change lenses:

1. Disconnect the fixture from AC power. Remove the top head cover.
2. From the outside of the bottom head cover, remove the screw that holds the lens in place. Remove the lens.
3. Install the new lens in the same position as the old one, in the inside lens slot.
4. Replace the screw to secure the new lens. Replace the top head cover.

section 9

TROUBLESHOOTING

Problem	Probable cause(s)	Remedy
One or more of the fixtures is completely dead.	No power to fixture.	Check that power is switched on and cables are plugged in.
	Primary fuse blown.	Replace fuse.
	Secondary fuse(s) blown (located on PCB inside base).	Check fuses on PCB and replace.
Fixtures reset correctly but all respond erratically or not at all to the controller.	The controller is not connected.	Connect controller.
	XLR pin-out of the controller does not match pin-out of the first fixture on the link (i.e. signal is reversed).	Install a phase-reversing cable between the controller and the first fixture on the link.
Fixtures reset correctly but some respond erratically or not at all to the controller.	Bad data link connection	Inspect connections and cables. Correct poor connections. Repair or replace damaged cables.
	Data link not terminated with 120Ω termination plug.	Insert termination plug in output jack of the last fixture on the link.
	Incorrect addressing of the fixtures.	Check address and protocol settings.
	One of the fixtures is defective and disturbs data transmission on the link.	Bypass one fixture at a time until normal operation is regained: unplug both connectors and connect them directly together. Have the defective fixture serviced by a qualified technician.
	XLR pin-out on fixtures does not match (pins 2 and 3 reversed).	Install a phase-reversing cable between the fixtures or swap pins 2 and 3 in the fixture that behaves erratically.
An effect fails to reset correctly.	The effect requires mechanical adjustment.	Contact Martin technician for service.
No light and “LERR” error message displayed.	The ballast and transformer settings do not match local AC voltage and frequency.	Disconnect fixture. Check ballast and transformer settings and correct if necessary.
	Lamp missing or blown	Disconnect fixture and replace lamp.
Lamp cuts out intermittently.	Fixture is too hot.	Allow fixture to cool. Reduce ambient room temperature. Recalibrate temperature sensors.
	The ballast and transformer settings do not match local AC voltage and frequency.	Check ballast and transformer settings and correct if necessary.

Table 7: Troubleshooting

appendix a

DMX PROTOCOL

DMX1	DMX2	DMX3	DMX4	Value	Percent	Function
Start code = 0						
						Shutter, Strobe, Reset, Lamp On/Off
				0 - 19	0 - 7	Shutter closed
				20 - 49	8 - 19	Open
				50 - 72	20 - 28	Strobe, fast to slow
				73 - 79	29 - 31	Open
				80 - 99	31 - 39	Opening pulse, fast to slow
				100 - 119	39 - 47	Closing pulse, fast to slow
				120 - 127	47 - 50	Open
				128 - 147	50 - 58	Random strobe, fast
	1			148 - 167	58 - 65	Random strobe, medium
				168 - 187	66 - 73	Random strobe, slow
				188 - 190	74 - 75	Open
				191 - 193	75 - 76	Random opening pulse, fast
				194 - 196	76 - 77	Random opening pulse, slow
				197 - 199	77 - 78	Random closing pulse, fast
Note: To override (DMX) Reset or Lamp Off = OFF, set all 3 CMY channels to a value from 230 to 232.				200 - 202	78 - 79	Random closing pulse, slow
				203 - 207	80 - 81	Open
				208 - 217	82 - 85	Reset, see note
				218 - 227	85 - 89	Open
				228 - 237	89 - 93	Lamp on
				238 - 247	93 - 97	Open
				248 - 255	97 - 100	Lamp off: time > 5 seconds, see note
	2			0 - 255	0 - 100	**Dimmer** Closed to open
	3			0 - 255	0 - 100	**Cyan** White to full cyan
	4			0 - 255	0 - 100	**Magenta** White to full magenta
	5			0 - 255	0 - 100	**Yellow** White to full yellow
						Color
				0 - 179	0 - 70	*Continuous scroll*
				0	0	White
				26	10	CTC 5500-2900K
				52	20	Pink 312
				78	31	UV
				104	41	Red 308
				130	51	Green 206
				156	61	Blue 108
						Stepped scroll
				180 - 183	71 - 72	Blue 108
				184 - 187	72 - 73	Green 206
	6			188 - 191	74 - 75	Red 308
				192 - 195	75 - 76	UV
				196 - 199	77 - 78	Pink 312
				200 - 203	78 - 80	CTC 5500-2900K
				204 - 207	80 - 81	White
						Continuous rotation
				208 - 226	82 - 88	CW, fast to slow
				227 - 245	89 - 96	CCW, slow to fast
						Random CMY color
				246 - 248	96 - 97	Fast
				249 - 251	98 - 98	Medium
				252 - 255	99 - 100	Slow

DMX1	DMX2	DMX3	DMX4	Value	Percent	Function
7				0 - 255	0 - 100	**Frost** Open (off) to full
8				0 - 255	0 - 100	**Pan** Left to right (128 = neutral)
-	9	-	9	0 - 255	0 - 100	**Pan Fine (LSB)** Left to right (128 = neutral)
9	10	9	10	0 - 255	0 - 100	**Tilt** Up to down (128 = neutral)
-	11	-	11	0 - 255	0 - 100	**Tilt Fine (LSB)** Up to down (128 = neutral)
-	-	10	12			**Pan/Tilt Speed**
				0 - 2	0 - 1	Tracking control
				3 - 245	1 - 96	Vector speed, fast to slow
				246 - 248	96 - 97	Tracking, PTSP SLOW (override FAST)
				249 - 251	98 - 98	Tracking, PTSP FAST (override SLOW)
				252 - 255	99 - 100	Blackout while moving
-	-	11	13			**Effects Speed**
						Dimmer, CMY filters
				0 - 2	0 - 1	Tracking control
				3 - 245	1 - 96	Vector speed, fast to slow
				246 - 248	96 - 97	Tracking, SCUT OFF (overrides ON)
				249 - 251	98 - 98	Tracking, SCUT ON (overrides OFF)
				252 - 255	99 - 100	Vector speed, fast
						Color wheel
				0 - 2	0 - 1	Tracking control
				3 - 245	1 - 96	Vector speed, fast to slow
				246 - 248	96 - 97	Tracking, SCUT OFF (overrides ON)
				249 - 251	98 - 98	Tracking, SCUT ON (overrides OFF)
				252 - 255	99 - 100	Blackout while moving
						Frost
				0 - 2	0 - 1	Tracking control
				3 - 251	1 - 98	Vector speed, fast to slow
				252 - 255	99 - 100	Vector speed, fast

appendix b

ERROR MESSAGES

Display readout	Appears if...	What to do
AUTO (Automatic protocol detection error)	... automatic protocol detection is enabled and there is no control input.	• Verify that controller is connected properly and sending data.
LERR (Lamp error)	... the lamp doesn't ignite within 10 minutes of receiving the 'Lamp ON' command.	• Check the lamp • Check voltage and frequency settings
MERR (Memory error)	... the EEPROM memory cannot be read.	• Contact service technician.
CSER (Check-sum error)	...a software upload is unsuccessful.	• Reload software, see page 19.
****	... there is no communication between the control panel and motherboard. This appears briefly when switching on the fixture.	• Check fuses. • Check cable between control panel and motherboard. • Reinstall software. • Contact service technician.
ShER (Short error)	... the fixture detects the lamp is ON but no 'Lamp ON' command has been received. This can occur if the lamp relay is stuck.	• The fixture may be operated but remote lamp on/off may be effected. • Contact service technician.
Hot (Hot lamp)	... you attempt to strike the lamp within 8 minutes after having switched it off. The fixture will store the 'Lamp ON' instruction and strike the lamp once the 8 minutes period has elapsed.	• Wait until the lamp strikes.
FbEP (Feedback error pan) FbET (Feedback error tilt) FbER (Feedback error pan/tilt)	...pan (FbEp), tilt (FbET) or both (FbER) feedback circuits are malfunctioning.	• The fixture will still operate, though with reduced maximum speed to prevent the fixture from losing track of its position. • Contact service technician.
PAER (Pan time-out) TIER (Tilt time-out)	...the pan or tilt indexing circuit is malfunctioning.	• After the time-out the fixture will work normally. • Contact service technician.
COER (Color wheel time-out) CYER (Cyan wheel time-out) MAER (Magenta wheel time-out) YEER (Yellow wheel time-out)	...the magnetic-indexing circuit malfunctions or the effect wheel is misaligned.	• After the time-out, the effect in question stops in a random position. • Contact service technician.

appendix c

PCB LAYOUT

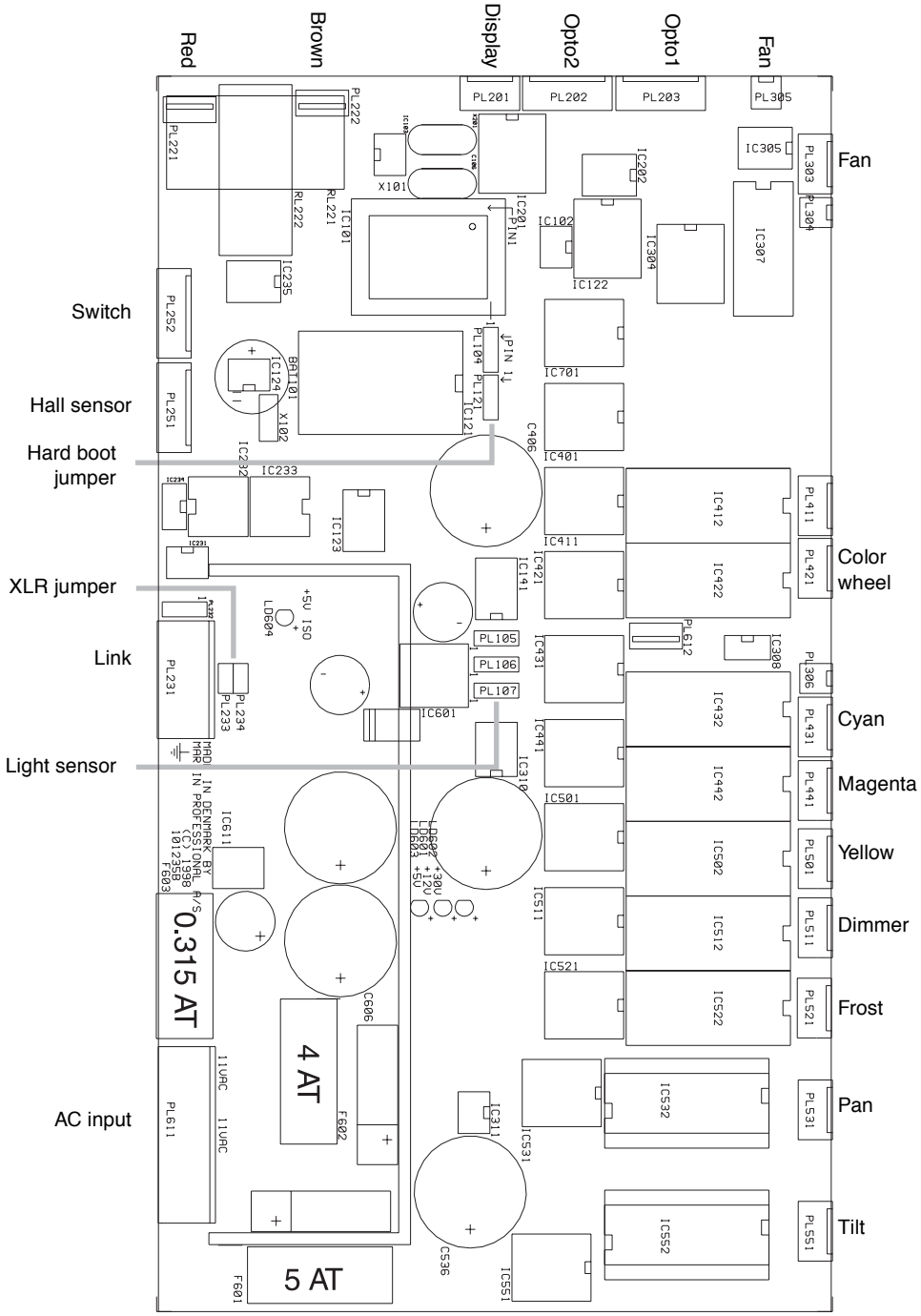

appendix d

ACCESSORIES

- Wide angle diffuser lens: 91610016
- Flight case, 4 x MAC 250/300: 91510005
- Flight case, 2 x MAC 250/300: 91510004
- MPBB1 Uploader: 90758410
- G-clamp: 91602003
- Half-coupler clamp: 91602005

Color filters

Filter	P/N	Filter	P/N
Blue 101	46404301	Purple 502	46404314
Blue 102	46404326	Purple 509	46404338
Blue 103	46404327	Red 301	46404315
Blue 104	46404302	Red 304	46404339
Blue 105	46404328	Red 305	46404340
Blue 106	46404303	Red 308	46404316
Blue 107	46404325	Red 309	46404341
Blue 108	46404320	Yellow 601	46404317
Blue 111	46404304	Yellow 602	46404342
Cyan 401	46404305	Yellow 603	46404318
CTC 5500-2900K	46404306	Yellow 604	46404319
CTC 5500-3400K	46404324	Green 201	46404329
CTC 5500-4200K	46404307	Green 202	46404310
CTC 3200-5600K	46404308	Green 203	46404330
CTC 3200-4100K	46404309	Green 204	46404321
Magenta 501	46404333	Green 205	46404331
Magenta 504	46404334	Green 206	46404311
Magenta 505	46404335	Green 208	46404332
Magenta 507	46404312	Orange 302	46404322
Pink 303	46404336	Orange 306	46404323
Pink 307	46404337	1/2 Minus Green	46404343
Pink 312	46404313	UV-transmitter	46404344

appendix e

SPECIFICATIONS

Physical

- Length ..... 330 mm (13.0 in.)
- Width ..... 384 mm (15.1 in.)
- Maximum height (full tilt) ..... 536 mm (21.1 in.)
- Approximate weight ..... 21 kg (46 lbs)

Compatible lamps

- Osram HSD 250 ..... 2000 hr., 6000K, 250 W, 68 lm/W
- Philips MSD 250/2 ..... 2000 hr., 6500K, 250 W, 68 lm/W
- Philips MSD 200 ..... 2000 hr., 5600K, 200 W, 66 lm/W

Performance

- Light output (MSD 250/2, no effects applied) ..... 4765 lumens

Thermal

- Maximum ambient temperature (T_a) ..... 40° C (104° F)
- Maximum lamp-socket temperature ..... 150° C (302° F)
- Maximum shell surface temperature ..... 90° C (194° F)

Control and programming

- Data pin-out ..... pin 1 shield, pin 2 cold (-), pin 3 hot (+)
- Receiver ..... Opto-isolated RS-485
- Protocols ..... USITT DMX-512 (1990), Martin RS-485
- DMX Channels ..... 9 - 13

Connections

- AC input ..... 3-prong IEC male socket
- Data input ..... locking 3-pin XLR male socket
- Data output ..... locking 3-pin XLR female socket

Fuses

- Fuse 01 (primary) ..... 6.3 A / 250 V time-delay
- Fuse F601 ..... 5.0 A / 250 V time-delay
- Fuse F602 ..... 4.0 A / 250 V time-delay
- Fuse F603 ..... 0.315 A / 250 V time-delay

Design standards

- Canadian safety ..... CSA C22.2 NO 166
- EU EMC ..... EN 50 081-1, EN 50 082-1
- EU safety ..... EN 60598-1, EN 60598-2-17
- US safety ..... ANSI/UL 1573

Installation

- Orientation ..... any
- Minimum distance to combustible materials ..... 0.4 m (16 in.)
- Minimum distance to illuminated surfaces ..... 0.4 m (16 in.)
- Minimum clearance around fans and air vents ..... 0.1 m (4 in.)

MAC 300 DMX Protocol

Start code = 0

Implemented from CPU software version 0.1

Mode 1	Mode 2	Mode 3	Mode 4		
LIGHT	1	-	9	-	9	**Shutter** closed | open; **Strobe** ←; **Open**; **Random Strobe** fast | med | slow; **Open**; **Reset** *; **Open**; **Lamp On**; **Open**; **Lamp Off*** > 5 sec.
	2	-	10	-	10	closed — **Dimmer** — open
COLOR	3	-	11	-	11	0% — **Cyan** — * — 100%
	4	-	12	-	12	0% — **Magenta** — * — 100%
	5	-	13	-	13	0% — **Yellow** — * — 100%
	6	-	14	-	14	**Continuous Color Scroll**: (0) white, (26) CTC, (52) pink, (78) UV, (104) red, (130) green, (156) blue; **Stepped Scroll** B | G | R | UV | PK | CT | W; **Continuous Rotation** cw ← | ccw →; **Rnd. CMY** f | m | s
BM	7	-	15	-	15	off — **Frost** — full
P/T	8	-	16	-	16	left — **Pan** — right (240° 210° 180° 150° 120° 90° 60° 30° 0° 30° 60° 90° 120° 150° 180° 210° 240°)
	-	9	-	9	17	left — **Pan Fine (LSB)** — right
	9	10	9	10	18	up — **Tilt** — down (130° 120° 110° 100° 90° 80° 70° 60° 50° 40° 30° 20° 10° 0° 10° 20° 30° 40° 50° 60° 70° 80° 90° 100° 110° 120° 130°)
	-	11	-	11	19	up — **Tilt Fine (LSB)** — down
SPEED	10	12	T	20		**Pan/Tilt Speed**: fast — slow; T_S | T_F | «·»
	11	13	T	21		**Effects Speed**: dimmer, CMY ←; color wheel ←; frost ←

** Set CMY from 230 to 232 to override disabled function.*
T = tracking mode (0-2 & 246-251)
S = normal PTSP or shortcuts off (246-248)
F = fast PTSP or shortcuts on (249 -251)
«·» = blackout speed (252-255)
← = variable speed, points to fast

T_S | T_F | f
T_S | T_F | «·»
f